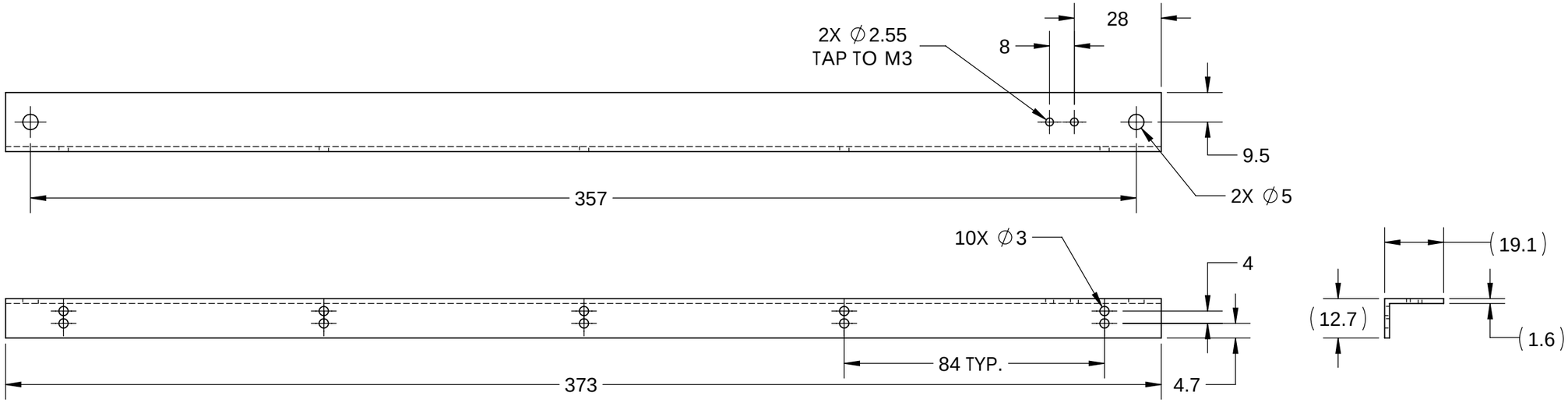

70005
X-Axis Cable Track Support Bracket
Mtl: Aluminum Angle

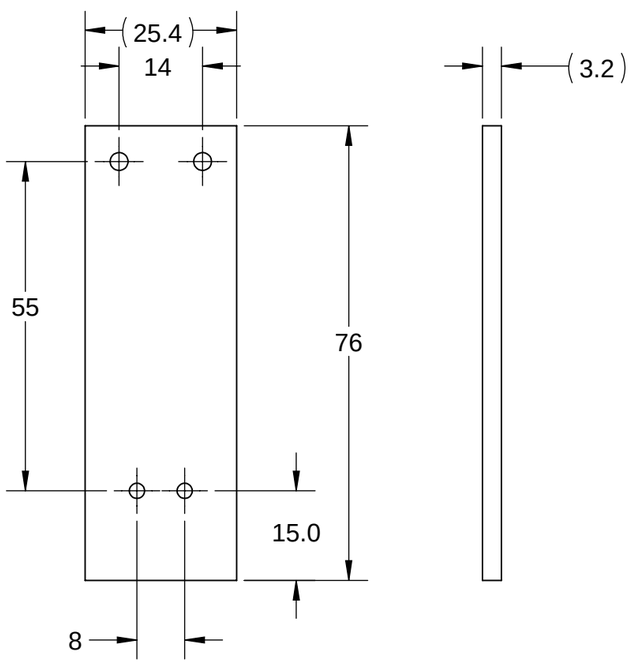

70002
Y-Axis Cable Track Bracket
Mtl: Aluminum Flatbar

NOTES:
1. ALL HOLE PATTERNS ARE SYMETRICAL WITH RESPECT TO THE PART CENTERLINE

PROPRIETARY AND CONFIDENTIAL
THE INFORMATION CONTAINED IN THIS DRAWING IS THE SOLE PROPERTY OF MARK QVALE. ANY REPRODUCTION IN PART OR AS A WHOLE WITHOUT THE WRITTEN PERMISSION OF MARK QVALE IS PROHIBITED.

UNLESS OTHERWISE SPECIFIED:
DIMENSIONAL TOLERANCE:
FRACTIONAL ± 1/32"
ONE PLACE DECIMAL ± 0.1"/0.3mm
TWO PLACE DECIMAL ± 0.03"/0.05MM

ALT MATERIAL
FINISH
DO NOT SCALE DRAWING

- itsqv.com -

TITLE:
Aluminum Brackets, Pg2

SIZE	PART NO.	REV
B	CNC003	
SCALE: 1:4	WEIGHT:	SHEET 1 OF 1